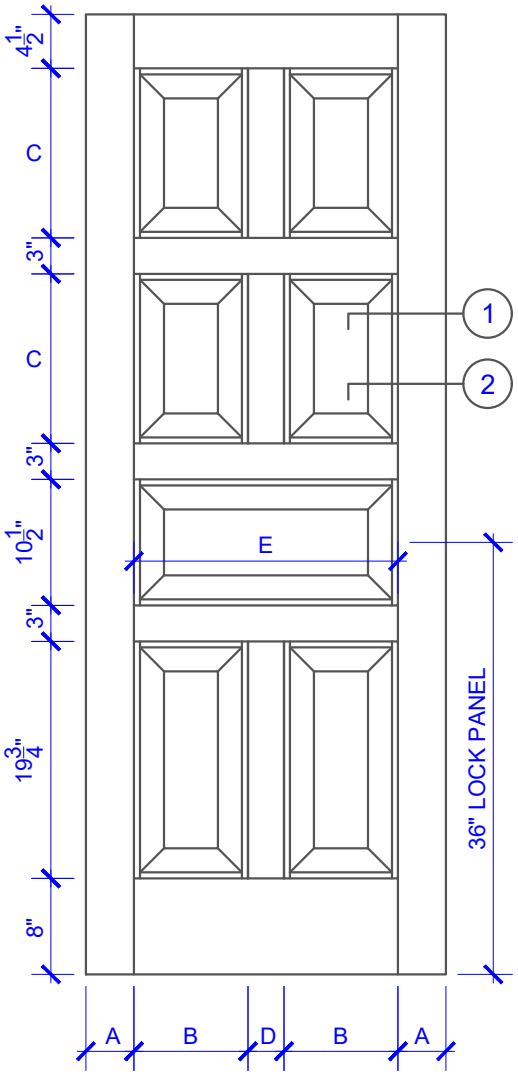

PASSAGE, POCKET, BYPASS, BARN DOORS

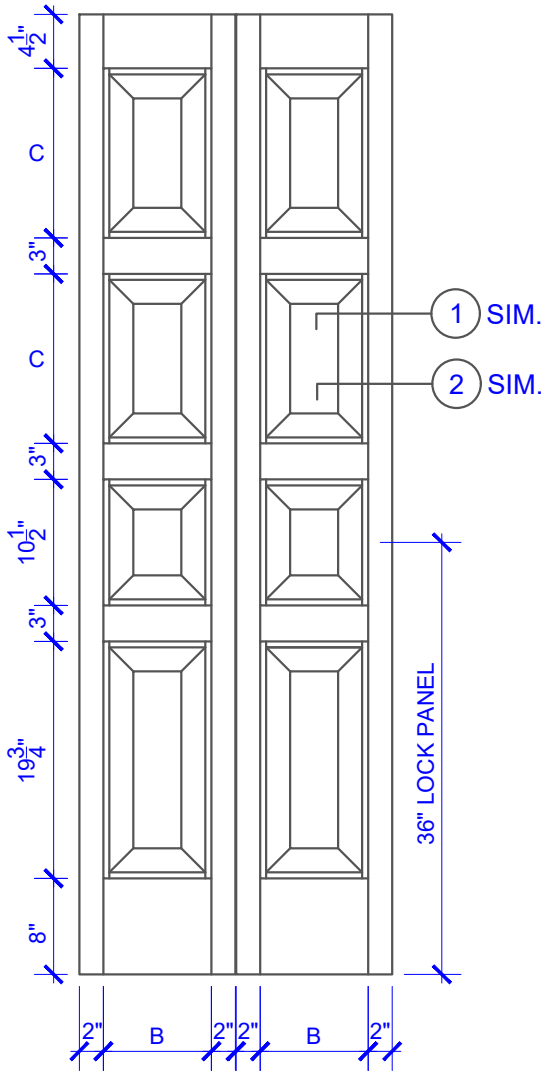

BIFOLD DOORS

DOOR COMPONENT SIZES					
DOOR WIDTH	STILE WIDTH "A"	PANEL WIDTH "B"	TOP PANEL HEIGHT "C"	MIDRAIL WIDTH "D"	PANEL WIDTH "E"
2-0 THRU 2-4	4"	VARIES	VARIES	2"	VARIES
2-6 THRU 4-0	4-1/2"	VARIES	VARIES	3"	VARIES

NOTES:

1. BIFOLD LEAF WIDTHS 10-11/16"-24" WILL HAVE 2" WIDE STILES.
2. ALL COMPONENTS (STILES, RAILS & MULLIONS) MEASUREMENTS ARE "NET" FACE-WIDTH DIMENSIONS, NOT INCLUDING STICKING PROFILES OR APPLIED MOULDING.
3. DOORS NARROWER THAN 2'-0" IN WIDTH ON 2 PANEL WIDE DOORS WILL BE MADE AS 1-PANEL WIDE IN A CORRESPONDING DESIGN. GP701 DESIGN 1-0 THRU 1-10 WIDE WOULD BE A GP701-4 PANEL DESIGN.

LEVEL 2 STEP STICKING

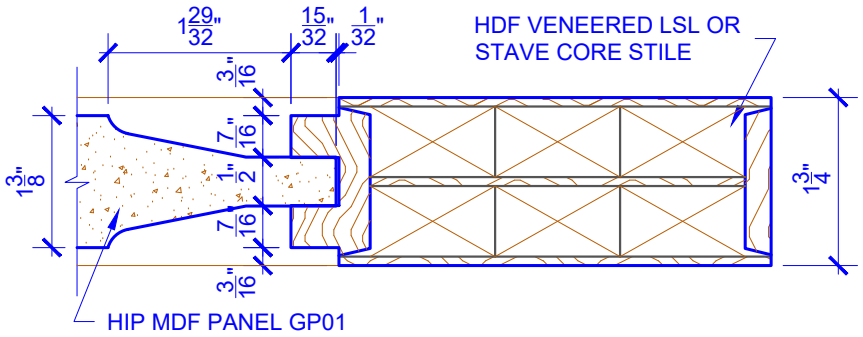

DETAIL 1

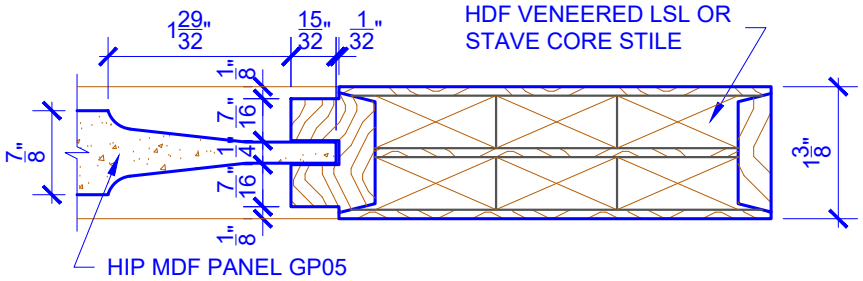

DETAIL 2

* SEE LIMITED LIFETIME WARRANTY FOR TOLERANCES AND EXCLUSIONS

MILLWORK 360
THE DEGREE OF SUPERIOR QUALITY

CUSTOMER:		DATE: 12/23/22	PO:
DRAWING TITLE: GP701 LEVEL 2 STANDARD DOOR		REVISION:	PAGE: 1 of 1
STICKING: STEP	SPECIES: HDF STAVE	PANEL: MDF HIP	

GRAND PORTE™ SERIES