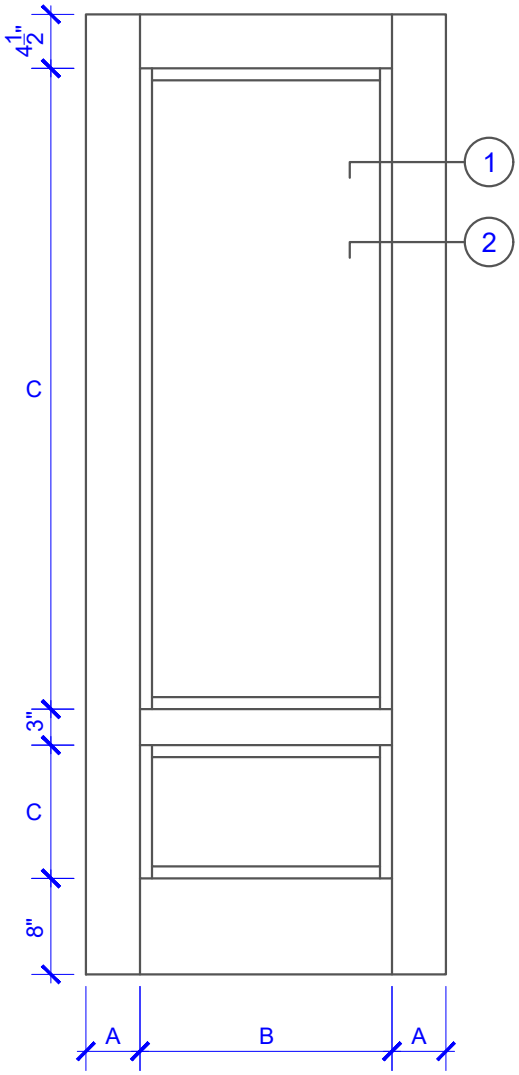

PASSAGE, POCKET, BYPASS, BARN DOORS

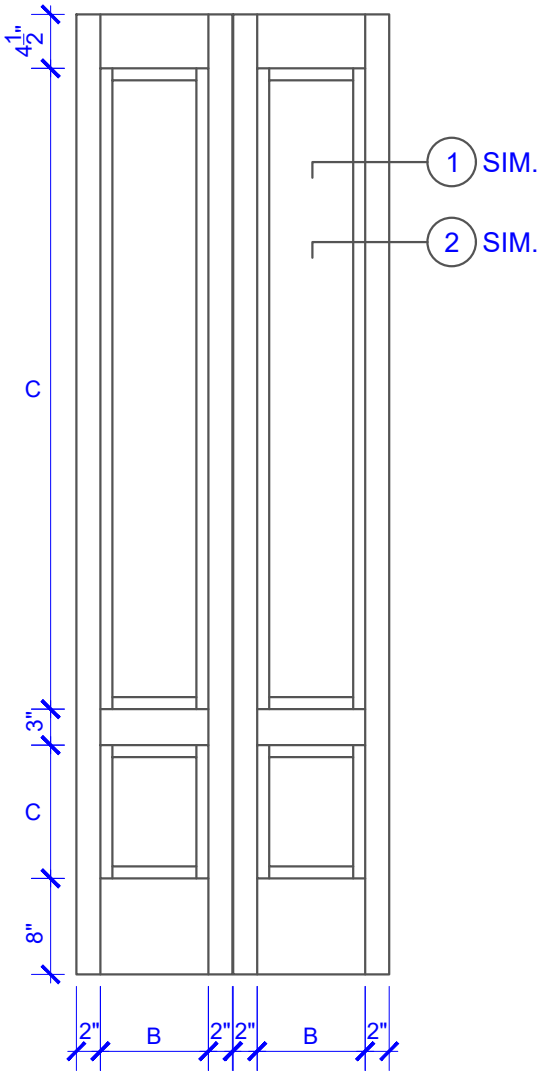

BIFOLD DOORS

DOOR COMPONENT SIZES			
DOOR WIDTH	STILE WIDTH "A"	PANEL WIDTH "B"	PANEL HEIGHT "C"
1-0 THRU 1-1	2"	VARIES	VARIES
1-2 THRU 1-3	3"	VARIES	VARIES
1-4 THRU 1-10	4"	VARIES	VARIES
2-0 THRU 4-0	4-1/2"	VARIES	VARIES

NOTES:

1. BIFOLD LEAF WIDTHS 9"-24" WILL HAVE 2" WIDE STILES.
2. ALL COMPONENTS (STILES, RAILS & MULLIONS) MEASUREMENTS ARE "NET" FACE-WIDTH DIMENSIONS, NOT INCLUDING STICKING PROFILES OR APPLIED MOULDING.

LEVEL 3 FLAT STEP

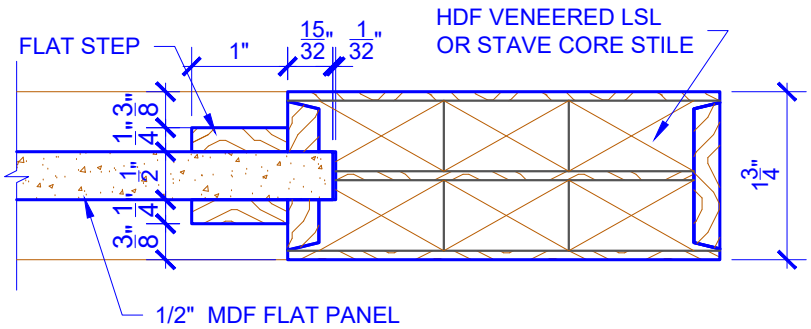

DETAIL 1

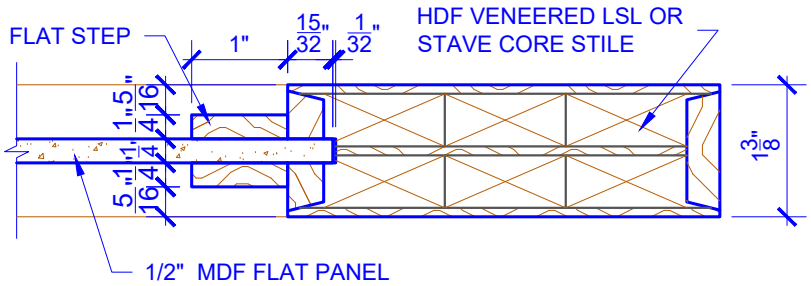

DETAIL 2

* SEE LIMITED LIFETIME WARRANTY FOR TOLERANCES AND EXCLUSIONS

MILLWORK 360
THE DEGREE OF SUPERIOR QUALITY

CUSTOMER:		DATE: 07/27/21	PO:
DRAWING TITLE: PN224 LEVEL 3 STANDARD DOOR		REVISION:	PAGE: 1 of 1
STICKING: FLAT STEP	SPECIES: HDF STAVE	PANEL: MDF FLAT	

PN PLANTATION™ SERIES