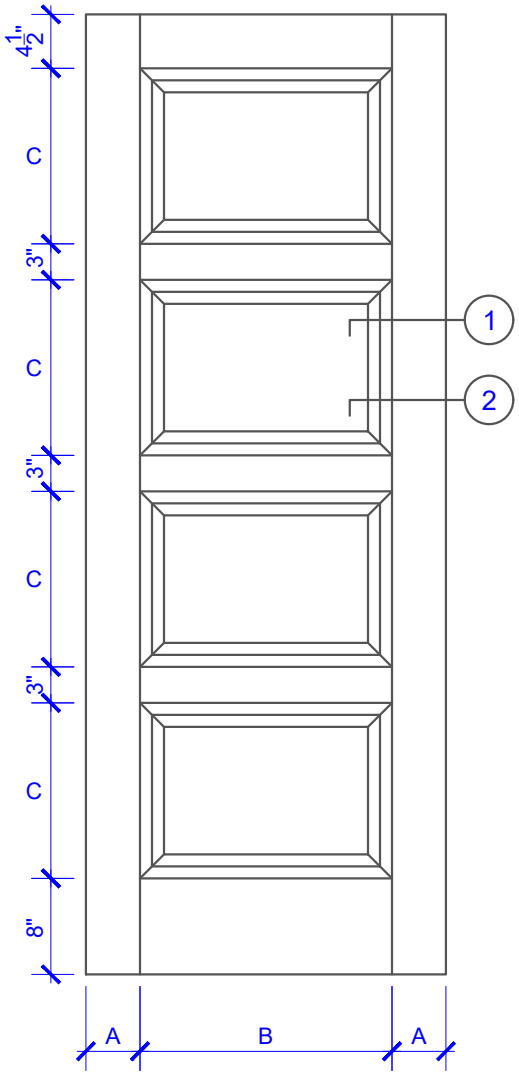

PASSAGE, POCKET, BYPASS, BARN DOORS

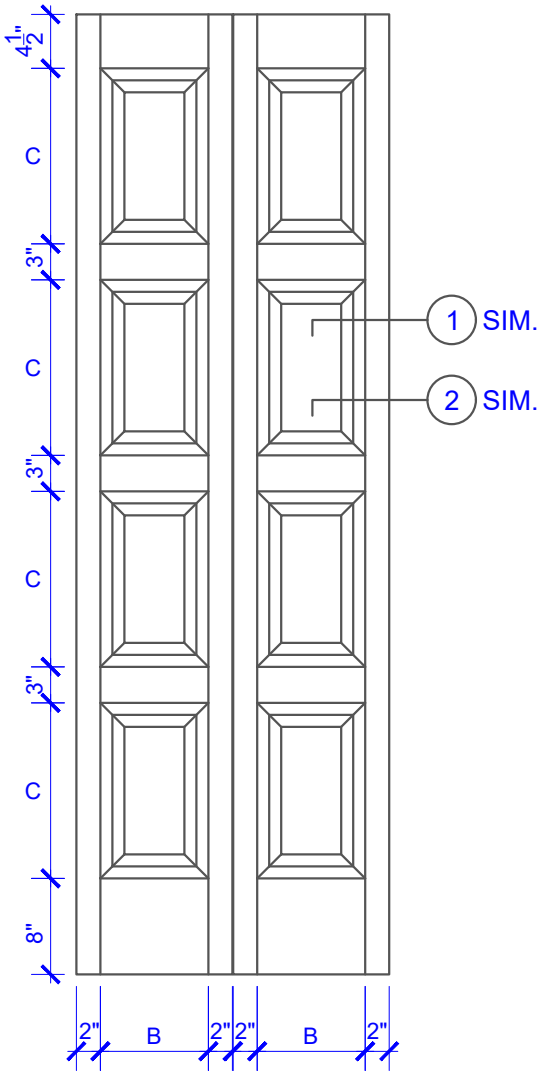

BIFOLD DOORS

DOOR COMPONENT SIZES			
DOOR WIDTH	STILE WIDTH "A"	PANEL WIDTH "B"	TOP PANEL HEIGHT "C"
2-0 THRU 2-4	4"	VARIES	VARIES
2-6 THRU 4-0	4-1/2"	VARIES	VARIES

NOTES:

1. BIFOLD LEAF WIDTHS 9"-24" WILL HAVE 2" WIDE STILES.
2. ALL COMPONENTS (STILES, RAILS & MULLIONS) MEASUREMENTS ARE "NET" FACE-WIDTH DIMENSIONS, NOT INCLUDING STICKING PROFILES OR APPLIED MOULDING.
3. DOORS NARROWER THAN 2'-0" IN WIDTH ON 2 OR 3 PANEL WIDE DOORS WILL BE MADE AS 1-PANEL WIDE IN A CORRESPONDING DESIGN. PN401 DESIGN 1-8 WIDE WOULD BE A PN201 DESIGN.

LEVEL 3 2 STEP

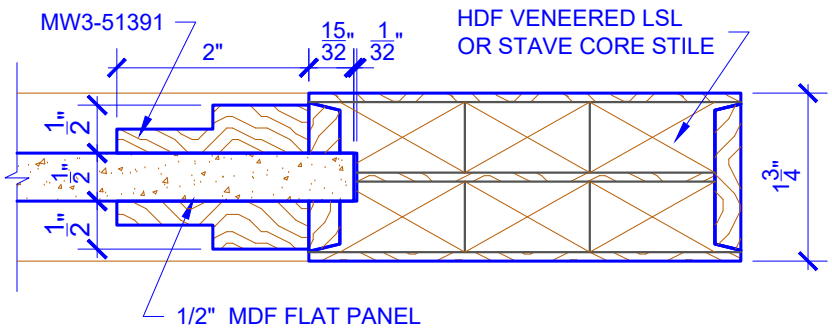

DETAIL 1

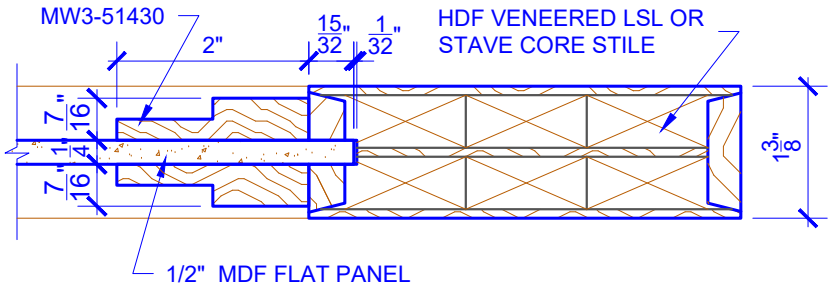

DETAIL 2

* SEE LIMITED LIFETIME WARRANTY FOR TOLERANCES AND EXCLUSIONS

MILLWORK 360
THE DEGREE OF SUPERIOR QUALITY

CUSTOMER:		DATE: 08/02/21	PO:
DRAWING TITLE: PN410 LEVEL 3 STANDARD DOOR		REVISION:	PAGE: 1 of 1
STICKING: 2 STEP	SPECIES: HDF STAVE	PANEL: MDF FLAT	

PN PLANTATION™ SERIES