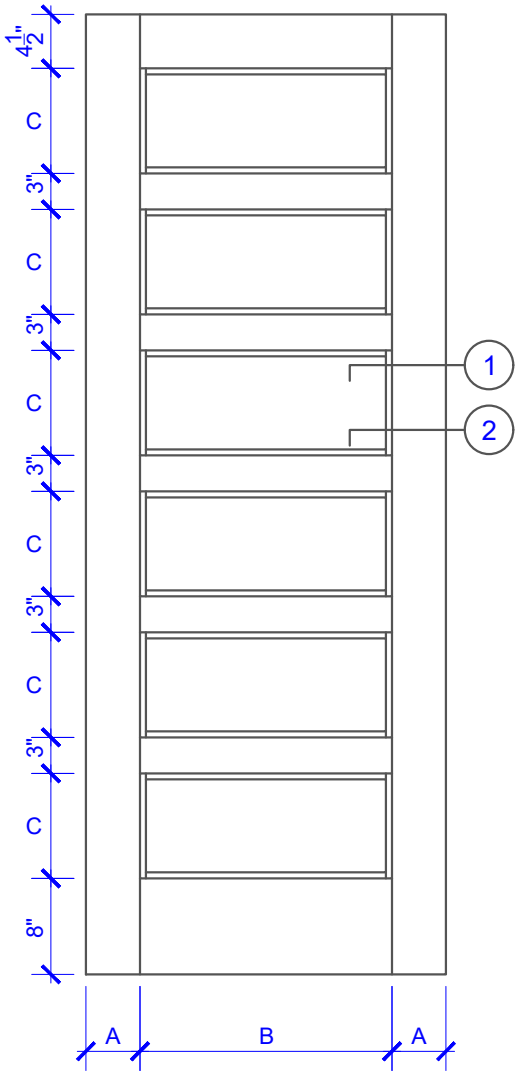


**PASSAGE, POCKET, BYPASS, BARN DOORS**

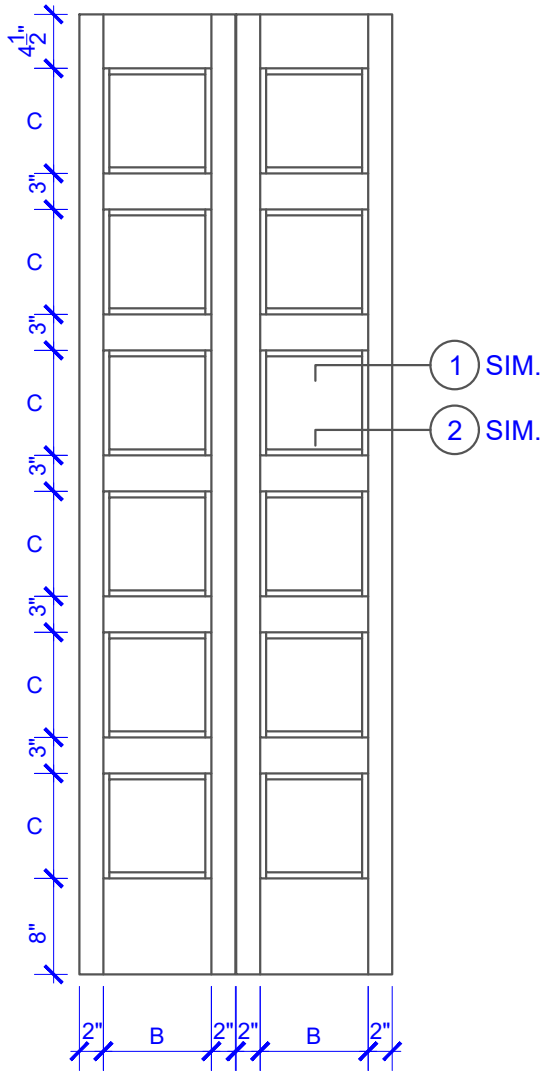


**BIFOLD DOORS**

| DOOR COMPONENT SIZES | | | |
|---|---|---|---|
| DOOR WIDTH | STILE WIDTH "A" | PANEL WIDTH "B" | PANEL HEIGHT "C" |
| 1-0 THRU 1-1 | 2" | VARIES | VARIES |
| 1-2 THRU 1-3 | 3" | VARIES | VARIES |
| 1-4 THRU 1-10 | 4" | VARIES | VARIES |
| 2-0 THRU 4-0 | 4-1/2" | VARIES | VARIES |

NOTES:

1. BIFOLD LEAF WIDTHS 9"-24" WILL HAVE 2" WIDE STILES.
2. ALL COMPONENTS (STILES, RAILS & MULLIONS) MEASUREMENTS ARE "NET" FACE-WIDTH DIMENSIONS, NOT INCLUDING STICKING PROFILES OR APPLIED MOULDING.

## LEVEL 2 STEP STICKING

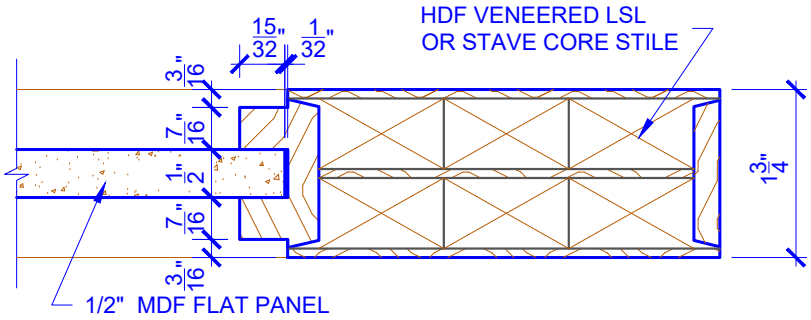


**DETAIL 1**

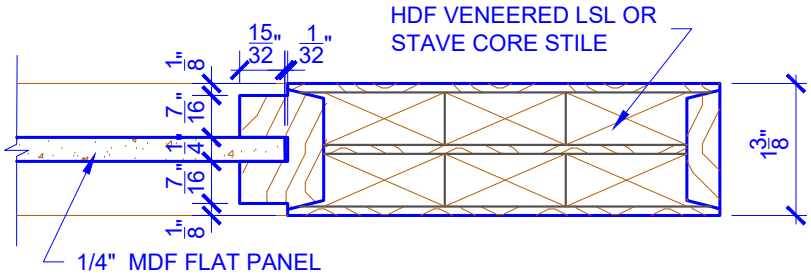


**DETAIL 2**

* SEE LIMITED LIFETIME WARRANTY FOR TOLERANCES AND EXCLUSIONS

MILLWORK 360
THE DEGREE OF SUPERIOR QUALITY

| | | | |
|---|---|---|---|
| CUSTOMER: | | DATE: 07/27/21 | PO: |
| DRAWING TITLE: PN610 LEVEL 2 STANDARD DOOR | | REVISION: | PAGE: 1 of 1 |
| STICKING: STEP | SPECIES: HDF STAVE | PANEL: MDF FLAT | |

PN PLANTATION™ SERIES